Acme Sanitary Ware Co Ltd
Acme Building, 22-28 Nanking Street, Kowloon, Hong Kong
Tel: 2388 7171 Fax: 2710 8012
E-mail: acme@acmesanitary.com.hk
Website: www. acmesanitaryware.com.hk

PROJECT		REF		REV	ITEM CODE	
LOCATION		DATE			PAGE	

SANITARY WARE SPECIFICATION SHEET

Item Descriptions	Grohe (Germany) Chrome plated push button liquid soap dispenser
Dimensions	Spout Height: 113mm
Model	36194000
Material / Finish	Chrome Plated
Manufacturer	Grohe (Germany)
Source	Acme Sanitary Ware Co. Ltd Mr. Eric Wong/ Mr. Don Yuen
Contact Tel/Fax E-mail Website	(852) 2388-7171 / (852) 2710-8012 acme@acmesanitary.com.hk www.acmesanitary.com.hk

Illustration/ Drawing

Product Description

- pillar tap with push-button,
- for liquid soap
- projection 113 mm
- for tap hole drillings 22 - 30 mm
- storage bin 1 L.
- **GROHE StarLight** finish

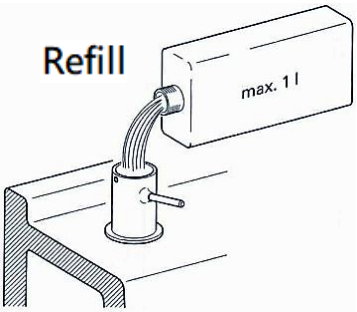

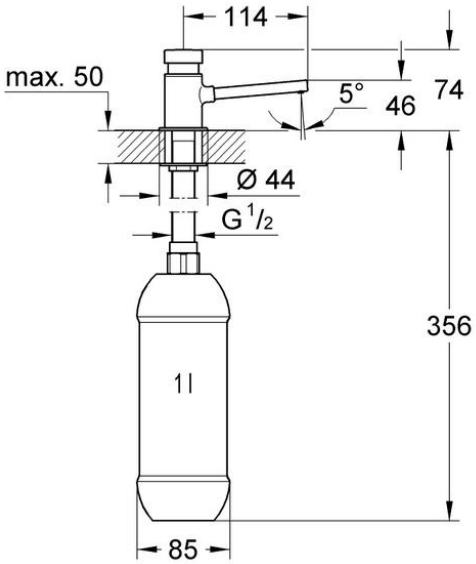

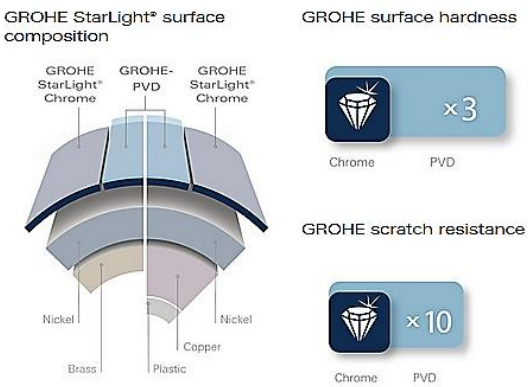

Note:

** All information of the above is for reference only. No prior notice is made if any changes.*